SaiFu®

赛福电容

SAFE ELECTRONICS

致力于成为世界一流供应商

To be a top supplier

电话：0562-2855865　　Tel：0086-562-2828608/2821018

传真：0562-2855972　　Fax：0086- 562-2828708/2821558

邮编：244000　　Zipcode：244000

网址：www.capacitorfilm.cn　　Web：www.capacitorfilm.com　　www.film-capacitor.com

www.anhuisafe.cn　　www.anhuisafe.com

邮箱：sunxs@anhuisafe.com　　E-mail：apple@anhuisafe.com　　mpp@film-capacitor.com

地址：中国 安徽省 铜陵市 狮子山国家高新区 纬一路北（栖凤路1771号）

ADD.: No.1771 QiFeng Road, Shizishan National High Technology Zone, Tongling, Anhui, China(Mainland)

SaiFu®

赛福电容

SAFE ELECTRONICS

电容器用金属化膜

Metallized film for capacitor use

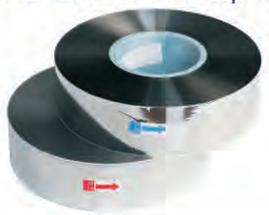

金属化膜电容器 Metallized film capacitor



安徽赛福电子有限公司

ANHUI SAFE ELECTRONICS CO.,LTD.

· 2018 ·

致力于成为世界一流供应商
www.capacitorfilm.com

Catalogue 目 录

1、公司介绍Company Profile

公司介绍Company Profile 1

2、公司实力Company Strength

质量服务宗旨 Quality Service Tenet 2

公司荣誉和认证 Honor and Certificate 3

公司组织架构 Company Structure 4

3、车间设备Workshop Facilities & Equipment

生产车间Production Workshop 5

专业测试设备及检测仪器Professional Test Equipment and Testing Instrument 6

专业生产设备Professional Manufacturing Equipment 7

社会责任Social Responsibility 10

4、电容器用金属化薄膜 Metallized Film for Capacitor Use

电容器用金属化薄膜 Metallized Film for Capacitor Use 11

5、交流电动机电容器AC Motor Capacitor

CBB65交流电动机电容器(圆柱形、铝外壳、防爆)

CBB65 AC Motor Capacitor(column，aluminum case，Explosion-proofed) 23

CBB61交流电动机电容器(塑料外壳)

CBB61 AC Motor Capacitor(plastic case) 25

CBB60交流电动机电容器(圆柱形、塑料外壳)

CBB60 AC Motor Capacitor(column，plastic case) 27

6、特种电容器Special Capacitor

光伏风电圆柱直流滤波电容器DC-LINK Capacitor(photovoltaic wind power cylinder) 29

CBB15、CBB16逆变焊机直流滤波电容器

CBB15、CBB16 Welding Inverter DC Filter Capacitor 33

储能脉冲直流滤波电容器Energy Storage, Pulsed, DC-Link Capacitor 36

产品编码说明Part Number System 37

7、基础知识 Basic Knowledge

电容器应用指南 Application Guide for Capacitor 38

电容器功用Capacitor function 40

注意事项 Application Notes 42

常用术语 Common Terms 46

内部构造 Internal Structure 52

SaiFu® 赛福电容 SAFE ELECTRONICS



Company profile 公司介绍

安徽赛福电子有限公司成立于2007年2月，专业生产电容器用金属化薄膜及金属化薄膜电容器，公司座落于铜陵市。公司现为中国国际商会会员企业。

Anhui Safe Electronics Co.,LTD., was founded in February 2007. The company is located in Tongling City, Anhui Province, China, specialized in manufacturing metallized film for capacitor use and metallized film capacitors. Now it's a member of CCOIC.

公司质量管理体系获得ISO9001认证，产品获得CQC、TUV、UL、VDE等性能认证，产品符合欧盟RoHS指令要求，拥有SGS报告。公司拥有强大的研发团队，获得80多项专利，其中发明专利12项，与安徽省光电子应用工程技术研究中心建立了紧密的合作关系。2012年、2015年、2018年公司连续三期被评为“国家高新技术企业”。2014年11月，我司两大主导产品薄膜电容器SaiFu、电容器用薄膜SF商标均被授予省级“著名商标”；2014年12月18日，公司在安徽省股权托管交易中心挂牌(股份代码：700169)。2016年省级两化融合管理体系贯标试点企业。2017年，我司被授予“安徽省电商示范企业、安徽省数字化车间”，入选“安徽省小微成长企业”和安徽省制造业与互联网融合发展试点企业。2018年国家知识产权优势企业”。公司负责人周峰是“安徽创新创业领军人才”。

Our quality management system are certified by ISO9001 and our products have CQC, TUV, UL, VDE and other performance certifications, compliance with EU RoHS directive, with SGS report. The company has a powerful R & D team, a total of nearly 80 patents, including twelve invention patents. It has established a close cooperation relationship with Anhui Province Optoelectronic Applied Engineering Technology Research Center . Our company was awarded “National High-tech Enterprise” for three consecutive period in 2012, 2015 and 2018. In November 2014, the trademarks of company's two future products, “Saifu” for film capacitor and “SF” for capacitor film was rated as provincial “Famous Trademark”. On Dec 18, 2014, our company put public listing on Anhui Equity Exchange Center (stock code: 700169). In 2016, Standard pilot enterprise of Provincial two-integrated management system. In 2017, our company was awarded the honor of "Anhui E-Commerce Demonstration Enterprise" and "Anhui Digital Workshop", was selected "Anhui Small and Micro Growing Enterprise", and Anhui Province Manufacturing and Internet Integration Development Pilot Enterprise. 2018 National Intellectual Property Advance Enterprise. The company leader Mr. Zhou Feng was awarded the Leading Talent of Innovation And Entrepreneurship of Anhui Province.

公司现拥有高真空镀膜机3台，高速分切机9台，卷绕机6台及四枪喷金系统等其他自动化设备。

The company now has 3 high-vacuum coating machines, 9 high-speed Slitting machines, 6 winding machines and four-gun gold spray system and other automatic equipments.

公司主要产品：电容器用金属化薄膜、CBB65（CBB61/60）交流电动机电容器、SFPEC系列电力电子电容器各种型号。其中SFPEC系列中干式直流滤波电容器被评为“安徽省高新技术产品”。

Main products: metallized film for capacitor use, CBB65（CBB61/60）AC motor capacitor and the SFPEC series of power electronics capacitors. The Dry DC filter capacitor of SFPEC series was rated as "High-tech Products in Anhui Province".

公司专注于新能源领域的高新技术企业，致力于成为世界一流供应商。

As a high-tech enterprise, we focus on the new energy field and commit to be a world-class supplier.



Quality service tenet 质量服务宗旨

质量方针： 质量第一，客户至上，优质服务，持续改进
我们坚持以客户为主体，满足和引导客户的需求，
向客户提供一流的服务。

Quality policy： Quality first, Customer foremost, Knight service, Sustainable improvement
We insist on giving priority to our customers, meet and lead the customers' needs, provide first-class service.

企业目标： 以可靠的品质，优质的服务，致力于成为世界一流供应商。

Enterprise target: To be a leading supplier with reliable quality and knight service.

企业精神： 求是进取、协作创新

Enterprise spirit: Realistic, enterprising, collaborative, innovative.

企业使命： 为客户、社会、员工提供满意的服务

Enterprise mission: Providing satisfied service for customer, society, employees.

经营理念： 细节决定成败

Business philosophy: Details determine success or failure.

经营方针： 以人才推动创新，以团队提升竞争力

Management policy: To promote innovation with talents, to increase competitiveness with teams

SaiFu® 赛福电容 SAFE ELECTRONICS



Honor and certificate 公司荣誉和认证



























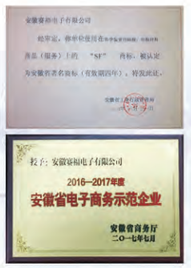



The company organization structure 公司组织架构

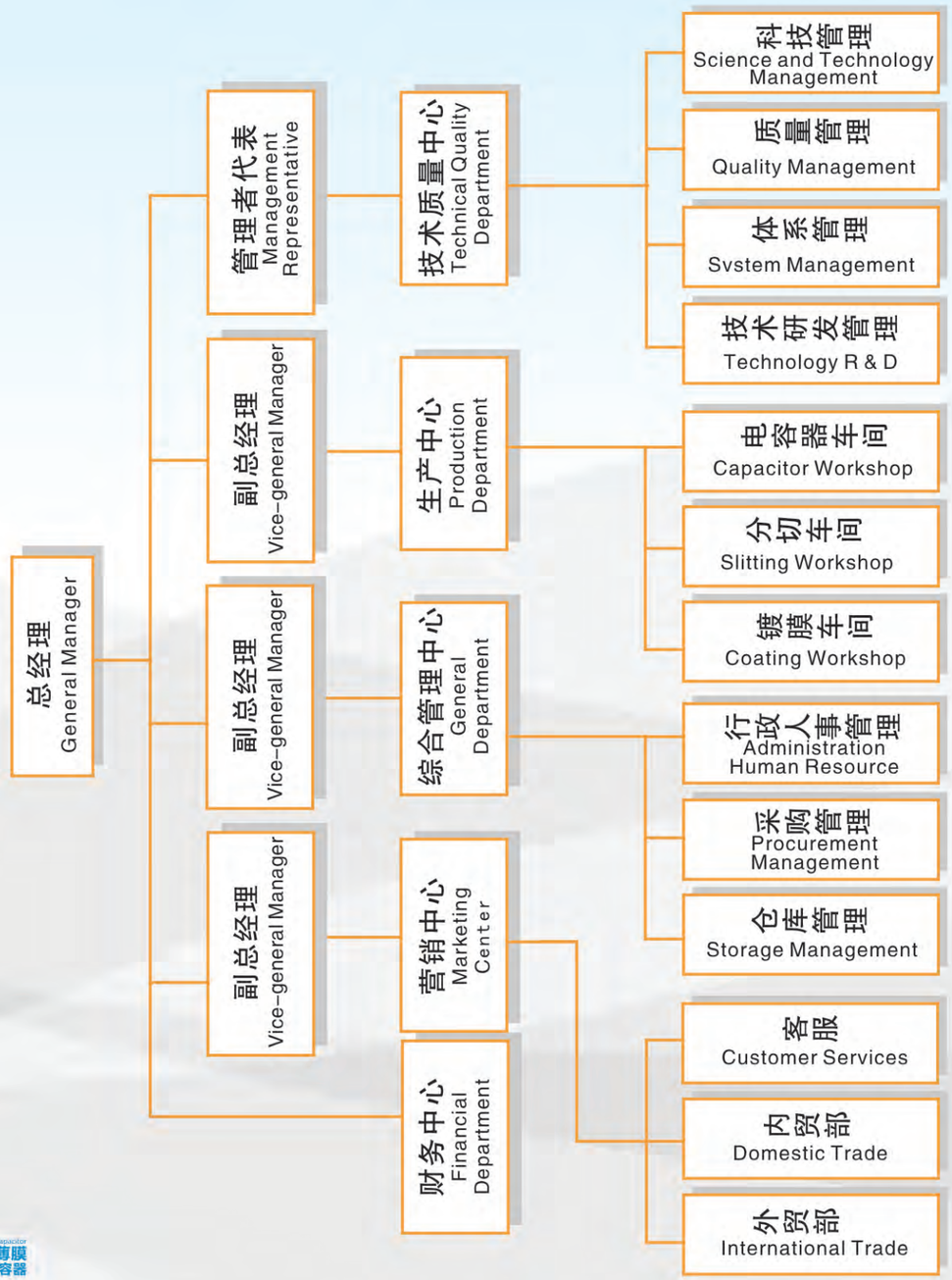

Production workshop 生产车间



无尘车间
Non-dust workshop









专业测试设备及检测仪器

Professional test equipment and testing instruments

直流耐压测试装置
DC Voltage test equipment ▶



交流耐压测试台
AC Voltage test equipment ▶



耐压测试仪
Voltage test equipment ▼



绝缘电阻测试仪
Insulation resistance tester ▼



高精密数字电桥
High precision digital bridge ▶



精密水分测试仪
Precision moisture tester ▶



专业 生产设备

Professional manufacturing equipment

真空镀膜机
Vacuum coating equipment ▶



光电纠偏分切机
Photoelectric correction slitter ◀



自动赋能机
Automatically energizing machine ▶



四段热压机
Flattering Press ▶



专业 生产设备
Professional manufacturing equipment

四枪自动喷金机 ▶
Four gun metal spraying machine



真空包装机 ▶
Vacuum packing machine



真空油处理器 ▶
Vacuum oil processor



除湿烘箱 ▼
Dehumidification drying oven



专业 生产设备
Professional manufacturing equipment

全自动高精密电容器卷绕机 ▼
High precision automatic winding machine







Social responsibility 社会责任

铜都创业之星
Entrepreneurship Star



先锋模范
Vanguard and Exemplary





军民融合，拥军慰问
Civil military integration support of the army



汶川地震公司上下踊跃捐款
Company donation for Wenchuan Earthquake



Metallized film for capacitor use 电容器用金属化薄膜



Types of Metallized Layer 镀层形式

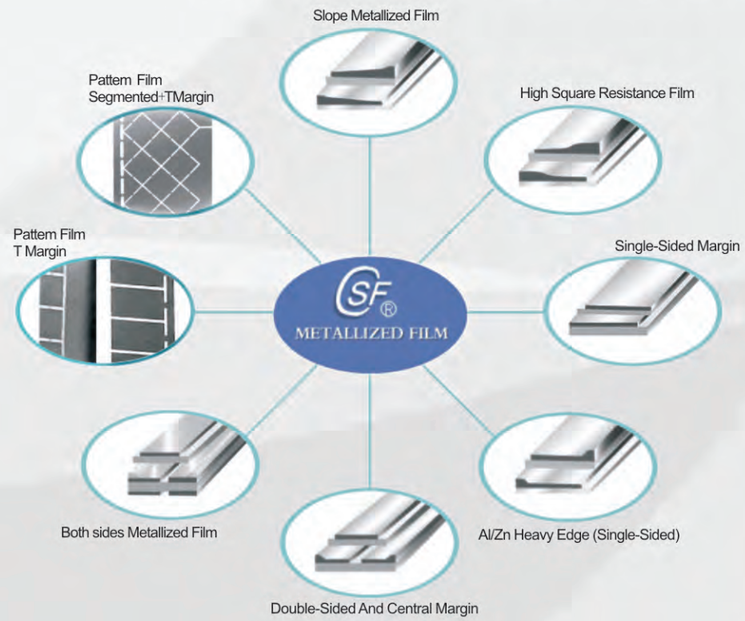

金属化薄膜产品的命名与代码

Type and named of metallized film

MPPHZn/AlH — 类型代码 Type code

5.8*100*2.5 — 规格尺寸 Specification size

S — 留边形式 Margin type

类型代码 Type code	规格尺寸 Specification size	留边形式 Margin type
M 金属化Metallized PP 聚丙烯薄膜 Polypropylene film PET 聚酯薄膜 Polyester film PPH 耐高温聚丙烯薄膜 High temperature OPP film Zn 金属镀层为锌 Metal coating is Zinc Al 金属镀层为铝 Metal coating is Aluminum H 边缘加厚型镀层 Heavy edge D 双面金属化 Double side metallized F 安全膜 Segmented metallized film	第一节表示厚度 The first section: Thickness 单位是μm Unit: μm 第二节表示宽度 The second section: width 单位是mm Unit: mm 第三节表示留边量 The third section: Margin width 单位是mm Unit: mm	S 单留边 Single margin T 双留边 Double margin M 中留边 Middle margin R 三串膜 Internal three series V 四串膜 Internal four series

薄膜厚度的表示方法 Film thickness representation

薄膜厚度的表示方法为薄膜厚度整数值加小数点后一位或加英文代码（见下表）。
The representation method of film thickness is by adding a decimal point to the integral value of the film thickness or adding an English code (see the following table).

英文代码 English code	表示数值 Numerial number	英文代码 English code	表示数值 Numerial number
负差Negative tolerance		正差Positive tolerance	
B	−0.4	V	+0.1
C	−0.3	W	+0.2
D	−0.2	X	+0.3
E	−0.1	Y	+0.4
L	0	Z	+0.5

例如：6D表示薄膜厚度为5.8μm，2W表示薄膜厚度为2.2μm。
For example：6D means thickness is 5.8μm, 2W means thickness is 2.2μm.

Products 产品

1、MPPZn/Al-S单面单留边锌铝金属化聚丙烯薄膜

Single margin OPP film with one side Zn-Al metallized

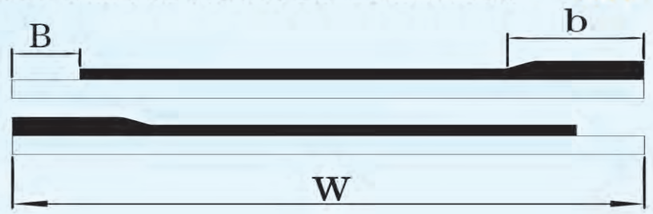

基膜 Base film	聚丙烯 PP	聚酯 PET
常规厚度 Normal thickness	2.2μm~15.0μm	1.9μm~12.0μm
留边形式Margin type	单留边Single	
蒸镀金属Coating metal	锌铝合金 Zinc-Aluminum alloy	
蒸镀面Coating side	单面 Single	
边缘结构Edge structure	边缘加厚 Heavy edge	

方块电阻 Square resistance

加厚区方阻 Reinforced resistance	非加厚区方阻 Normal resistance
(2~4)Ω/□	(6~9)Ω/□
(1~3)Ω/□	(4~6)Ω/□
(1~3)Ω/□	(12~18)Ω/□
(2~4)Ω/□	(17~23)Ω/□

常用产品规格（宽度和留边量）
Normal film Width and Margin

宽度（W）Width（mm）	留边量(B) Margin(mm)	宽度（W）Width（mm）	留边量(B) Margin(mm)	宽度（W）Width（mm）	留边量(B) Margin(mm)
7.0	0.5/1.5	40	2.5	60	2.0/2.5
9.0	1.5	42.5	2.5	62.5	2.5
10	1.0/1.5	43	2.0	65	2.5
14	1.0	45	2.0	70	2.5
19	1.5	50	2.0/2.5	75	2.0/2.5
21	1.5/2.0	45	2.0	80	2.5
25	2.5	43	2.0	85	2.5
26	1.5/2.0	45	2.0	90	2.0/2.5
30	2.0/2.5	50	2.0/2.5	95	2.5
35	2.5	50	2.0/2.5	100	2.0/2.5
37.5	2.0/2.5	55	2.5	120	2.5

备注：可根据客户需求定制所需方阻、宽度与留边。
Note: If customer needs other resistance, film width or margin, please contact us.

膜卷内外径 Inside/outside core diameter：

膜卷内径及允许偏差 Inside core diameter/Tolerance		膜卷外径及允许偏差 Outside core diameter/Tolerance	
75mm	+1/−0.5mm	175 220 280 320	±25mm ±20mm ±20mm ±20mm
备注：同一对膜外径偏差≤2mm Note: A pair tolerance of outside core diameter ≤2mm.			

2、MPPZn/Al-S单面单留边渐变方阻锌铝金属化聚丙烯薄膜
Single margin OPP film with slope resistance one side Zn-Al metallized



基膜Base film	聚丙烯PP
常规厚度Normal thickness	2.2μm~15.0μm
留边形式Margin type	单留边Single
蒸镀金属Coating metal	锌铝合金 Zinc-Aluminum alloy
蒸镀面Coating side	单面 Single
边缘结构Edge structure	边缘加厚 Heavy edge

方块电阻 Square resistance

加厚区方阻 Reinforced resistance	非加厚区方阻 Normal resistance
(2~4)Ω/□	(6~25)Ω/□渐变
(2~4)Ω/□	(6~20)Ω/□渐变
(2~4)Ω/□	(6~30)Ω/□渐变
(1~3)Ω/□	(4~26)Ω/□渐变

常用产品规格（宽度和留边量）
Normal film Width and Margin

宽度（W）Width（mm）	留边量(B) Margin(mm)	宽度（W）Width（mm）	留边量(B) Margin(mm)
45	2.5	70	2.5
50	2.0/2.5	75	2.0/2.5
55	2.0/2.5	80	2.0/2.5
60	2.0/2.5	85	2.0/2.5
62.5	4	100	2.0/2.5
65	2.5	125	2

备注：可根据客户需求定制所需方阻、宽度与留边。
Note: If customer needs other resistance, film width or margin, please contact us.

膜卷内外径 Inside/outside core diameter：

膜卷内径及允许偏差 Inside core diameter/Tolerance		膜卷外径及允许偏差 Outside core diameter/Tolerance	
75mm	+1/-0.5mm	220 280 320	±20mm ±20mm ±20mm
备注：同一对膜外径偏差≤2mm Note: A pair tolerance of outside core diameter ≤2mm.			

3、MPPZn/Al-S单面单留边高方阻锌铝金属化聚丙烯薄膜
Single margin OPP film with high resistance one side Zn-Al metallized

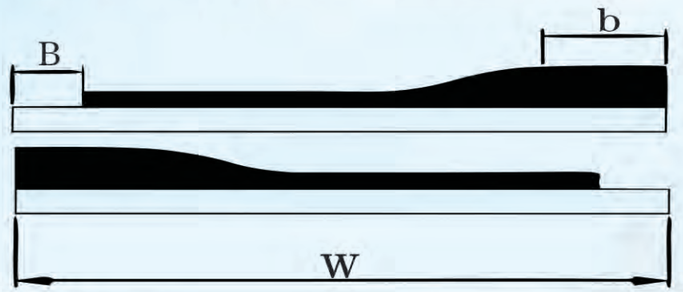

基膜 Base film	聚丙烯PP
常规厚度 Normal thickness	2.2μm~15.0μm
留边形式 Margin type	单留边Single
蒸镀金属 Coating metal	锌铝合金 Zinc-Aluminum alloy
蒸镀面 Coating side	单面 Single
边缘结构 Edge structure	边缘加厚 Heavy edge

方块电阻 Square resistance

加厚区方阻 Reinforced resistance	非加厚区方阻 Normal resistance
(2~4)Ω/□	(6~55)Ω/□渐变
	(6~80)Ω/□渐变
	(6~100)Ω/□渐变
	(6~120)Ω/□渐变

常用产品规格（宽度和留边量）
Normal film Width and Margin

宽度（W）Width（mm）	留边量(B) Margin(mm)	宽度（W）Width（mm）	留边量(B) Margin(mm)
37.5	2.0/2.5	90	2.0/2.5
50	2.0/2.5	95	2
55	2.0/2.5	100	2.5
60	2.0/2.5	110	2.5
65.5	2.0	115	2.5
75	2.0/2.5		

备注：可根据客户需求定制所需方阻、宽度与留边。
Note: If customer needs other resistance,film width or margin, please contact us.

膜卷内外径 Inside/outside core diameter：

膜卷内径及允许偏差 Inside core diameter/Tolerance		膜卷外径及允许偏差 Outside core diameter/Tolerance	
75mm	+1/-0.5mm	220 280 320	±20mm ±20mm ±20mm
备注：同一对膜外径偏差≤2mm Note: A pair tolerance of outside core diameter ≤2mm.			

4、金属化安全膜
Segmented metallized film

A型：全菱形安全膜 Diamond Pattern



B型：全T形安全膜 T- Pattern



C型：半T形安全膜 1/2 T- Pattern



常用产品规格（宽度和留边量）Normal film Width and Margin

全菱形安全膜 Diamond Pattern		全T形安全膜 T-Pattern	半T形安全膜 1/2 T-Pattern
宽度（W）Width（mm）	宽度（W）Width（mm）	宽度（W）Width（mm）	宽度（W）Width（mm）
25	60	30	37.5
30	75	37.5	
35	85	50	
37.5	90	75	
40	100		
45	120		
50			

5、MPEDAl-M双面中留边铝金属化聚酯薄膜
Middle margin PET film with double sided Al metallized

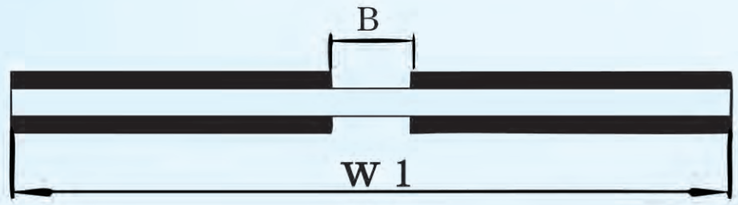

基膜 Base film	聚酯PET
常规厚度 Normal thickness	5.0μm~12.0μm
留边形式 Margin type	中留边Middle
蒸镀金属 Coating metal	铝 Aluminum
蒸镀面 Coating side	双面 Double
边缘结构 Edge structure	无边缘加厚 No heavy edge

方块电阻 Square resistance

方阻 Square resistance	偏差范围 Tolerance
1.5Ω/□	±30%
2.0Ω/□	±30%
2.5Ω/□	±30%

常用产品规格（宽度和留边量）
Normal film Width and Margin

宽度（W）Width（mm）	留边量(B) Margin(mm)	宽度（W）Width（mm）	留边量(B) Margin(mm)
14	3.0	38	3.0
18	3.0	42	3.0/4.0
20	2.0/3.0	52	3.0/4.0

备注：可根据客户需求定制所需方阻、宽度与留边。
Note: If customer needs other resistance, film width or margin, please contact us.

膜卷内外径 Inside/outside core diameter：

膜卷内径及允许偏差 Inside core diameter/Tolerance		膜卷外径及允许偏差 Outside core diameter/Tolerance	
75mm	+1/-0.5mm	175 220	±25mm ±20mm
备注：同一对膜外径偏差≤2mm Note: A pair tolerance of outside core diameter ≤2mm.			

6、MPPAl-S单面单留边铝金属化聚丙烯薄膜
Single margin OPP film with one side Al metallized

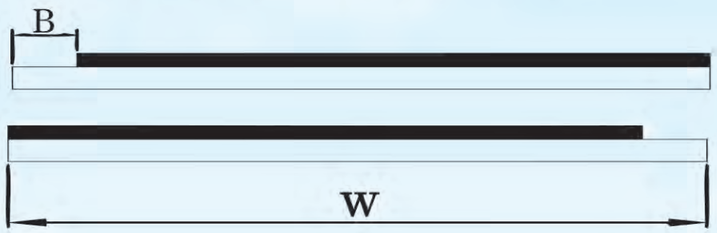

基膜 Base film	聚丙烯 PP	聚酯 PET
常规厚度 Normal thickness	2.2μm~15.0μm	1.9μm~12.0μm
留边形式 Margin type	单留边 Single	
蒸镀金属 Coating metal	铝 Aluminum	
蒸镀面 Coating side	单面 Single	
边缘结构 Edge structure	无边缘加厚 No heavy edge	

方块电阻 Square resistance

方阻 Square resistance	偏差范围 Tolerance
1.5Ω/□	±30%
2.0Ω/□	±30%
2.5Ω/□	±30%
3.0Ω/□	±30%
3.5Ω/□	±30%

常用产品规格（宽度和留边量）
Normal film Width and Margin

宽度（W）Width（mm）	留边量(B) Margin(mm)	宽度（W）Width（mm）	留边量(B) Margin(mm)	宽度（W）Width（mm）	留边量(B) Margin(mm)
7.0	0.5/1.5	21	1.5/2.0	40	2.5
9.0	1.5	25	2.5	42.5	2.5
10	1.0/1.5	26	1.5/2.0	43	2.0
14	1.0	30	2.0/2.5	45	2.0
19	1.5	35	2.5	50	2.0/2.5
20	2.0/3.0	37.5	2.0/2.5	55	2.5

备注：可根据客户需求定制所需方阻、宽度与留边。
Note: If customer needs other resistance, film width or margin, please contact us.

膜卷内外径 Inside/outside core diameter：

膜卷内径及允许偏差 Inside core diameter/Tolerance		膜卷外径及允许偏差 Outside core diameter/Tolerance	
75mm	+1/-0.5mm	175 220	±25mm ±20mm
备注：同一对膜外径偏差≤2mm Note: A pair tolerance of outside core diameter ≤2mm.			

7、MPPAl-T单面双留边铝金属化聚丙烯薄膜
Double margin OPP film with one side Al metallized

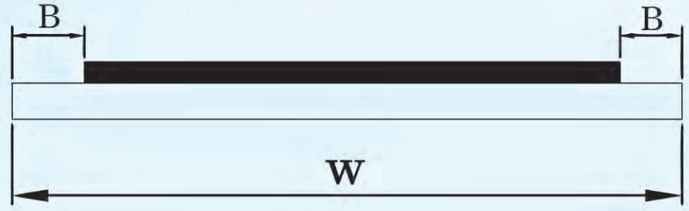

基膜 Base film	聚丙烯 PP	聚酯 PET
常规厚度N ormal thickness	2.2μm~15.0μm	1.9μm~12.0μm
留边形式 Margin type	双留边 Double	
蒸镀金属 Coating metal	铝 Aluminum	
蒸镀面 Coating side	单面 Single	
边缘结构E dge structure	无边缘加厚 No heavy edge	

方块电阻 Square resistance

方阻 Square resistance	偏差范围 Tolerance
1.5Ω/□	±30%
2.0Ω/□	±30%
2.5Ω/□	±30%
3.0Ω/□	±30%
3.5Ω/□	±30%

常用产品规格（宽度和留边量）
Normal film Width and Margin

宽度（W）Width（mm）	留边量(B) Margin(mm)	宽度（W）Width（mm）	留边量(B) Margin(mm)
14	1.5	42	1.5/2.0
18	1.5	50	2.5
20	1.0/1.5	52	1.5/2.0
38	1.5	60	2.0/2.5

备注：可根据客户需求定制所需方阻、宽度与留边。
Note: If customer needs other resistance, film width or margin, please contact us.

膜卷内外径 Inside/outside core diameter：

膜卷内径及允许偏差 Inside core diameter/Tolerance		膜卷外径及允许偏差 Outside core diameter/Tolerance	
75mm	+1/-0.5mm	175 220	±25mm ±20mm
备注：同一对膜外径偏差≤2mm Note: A pair tolerance of outside core diameter ≤2mm.			

8、MPPZn/Al-V单面多留边锌铝金属化聚丙烯薄膜
Multi-margin OPP film with one side Zn-Al metallized

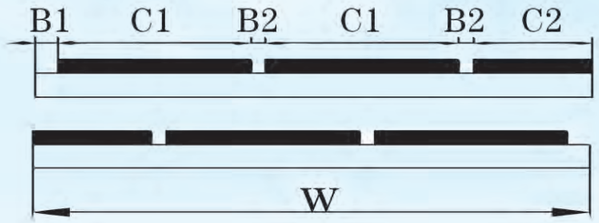

基膜Base film	聚丙烯PP
常规厚度 Normal thickness	2.2μm~15.0μm
留边形式 Margin type	多留边Many single
蒸镀金属 Coating metal	锌铝合金 Zinc-Aluminum alloy
蒸镀面 Coating side	单面 Single
边缘结构 Edge structure	边缘加厚 Heavy edge

方块电阻 Square resistance

加厚区方阻 Reinforced resistance	非加厚区方阻 Normal resistance
(1.5~3)Ω/□	(1.5~3)Ω/□
(2~4)Ω/□	(6~9)Ω/□

常用产品规格（宽度和留边量）
Normal film Width and Margin

宽度（W）Width（mm）	留边量(B1) Margin(mm)	留边量(B2) Margin(mm)
75	3.0	2.0
96	7.5	15
96	7.5	15
97	–	15
97	8.0	15

备注：可根据客户需求定制所需方阻、宽度与留边。
Note: If customer needs other resistance, film width or margin, please contact us.

膜卷内外径 Inside/outside core diameter：

膜卷内径及允许偏差 Inside core diameter/Tolerance		膜卷外径及允许偏差 Outside core diameter/Tolerance	
75mm	+1/-0.5mm	220 280 320	±20mm ±20mm ±20mm
备注：同一对膜外径偏差≤2mm Note: A pair tolerance of outside core diameter ≤2mm.			

Specifications of metallized film 金属化膜技术参数

金属化聚丙烯薄膜(MPP Film)：

性能 Properties	单位 Unit	典型值 Typical value
密度 Density	g/cm³	0.905±0.005
厚度 Thickness	μm	2.2 ~ 15
抗拉强度 Tensile Strength	纵向MD (MPa)	≥100
断裂伸长率 Elongation at Break	纵向MD (%)	20~200
弹性模量 Elastic Modulus	纵向MD (MPa)	2800
热收缩率 Heat Shrinkage	纵向MD (%)	≤5 (120° C, 10min)
湿润张力 Wetting Tension	mN/m	38 (电晕处理面Corona treated side)
表面粗糙度 Surface Roughness	μm	0.08
熔点 Melting Point	℃	172
体积电阻率 Volume Resistivity	Ω.m	$>10^{15}$
介电强度 Break-dowm Voltage	V/μm	≥350 (23° C, DC)
相对介电常数 Dielectric Constant		2.2 (20℃，1KHz)
介电损耗因数 Dissipation Factor		≤4×10-4 (20℃，1KHz)
RC值	ΩF	≥5×10⁴

金属化聚酯薄膜(MPET Film)：

性能 Properties	单位 Unit	典型值 Typical value
密度 Density	g/cm³	1.4
厚度 Thickness	μm	<5　5~12　≥12
抗拉强度 Tensile Strength	纵向MD (MPa)	≥84　≥108　≥120
断裂伸长率 Elongation at Break	纵向MD (%)	≥22　≥33　≥44
弹性模量 Elastic Modulus	纵向MD (MPa)	3500
介电强度 Break-dowm Voltage	V/μm	≥200 (23° C, DC)　≥250 (23° C, DC)
热收缩率 Heat Shrinkage	纵向MD (%)	≤2.5 (150° C, 10min)
表面粗糙度 Surface Roughness	μm	0.095
熔点 Melting Point	℃	256
体积电阻率 Volume Resistivity	Ω.m	$>10^{15}$
相对介电常数 Dielectric Constant		3.2
介电损耗因数 Dissipation Factor	–	≤60×10⁻⁴
RC值	ΩF	≥1×10⁴

Packing 包 装

膜卷用塑料袋包装，抽真空后放入干燥剂热封。
塑料包装袋外贴标签标明型号。
塑料袋外面用纸箱包装。
纸箱外面用木箱包装或者加固纸箱。

Film rolls are packed and heat-sealed in vacuum plastic bags with desiccants inside.
The Bags are marked with type labels. mark thickness width, free margin width and resistance.
The bags are packed in carton cases.
The cartons are wrapped in wooden cases or reinforced carton.





Storage 储 存

金属化膜在使用之前应该按原包装保存。环境温度应该控制在5～35℃，湿度少于85%RH。
金属层暴露在潮气中会很容易发生氧化。因此，包装打开后，膜卷应该尽快使用。
建议打开包装的膜卷应该保存的温度条件是15～25℃， 湿度小于60%RH。
金属化膜若保持原密封包装，并储存在如上所述的环境下，那么其储存期限可以满足下列条件：
铝金属化薄膜：从交付日起12个月。
锌铝金属化薄膜：因为锌相当不稳定，储存的期限（从交付日起）取决薄膜的电阻：
≤10 Ω/□：6个月
10–30Ω/□：3个月
＞30Ω/□：1个月

Metallized film should be stored in its original package with temperature 5-35℃ and humidity less than 85%RH before using.
Metallized layer is easily oxidized when exposure to moisture. Therefore, the film should be used as soon as possible when opened.
The recommended temperature is 15 -25℃ with humidity less than 60%RH after opening
With original sealed package, and stored as mentioned above, the storage time can be as following:
Al metallized film: 12 months from the delivery date. Al/Zn Alloy metallized film: As zinc is quite unstable , the storage period (from delivery date) depends on the resistance of the film:
≤10 Ω/□: 6 months
10–30Ω/□: 3 months
＞30Ω/□: 1month





CBB65交流电动机电容器(圆柱形、铝外壳、防爆)

CBB65 AC Motor Capacitor (Column，Aluminum case，Explosion–proofed)

Outline Drawing 外形图

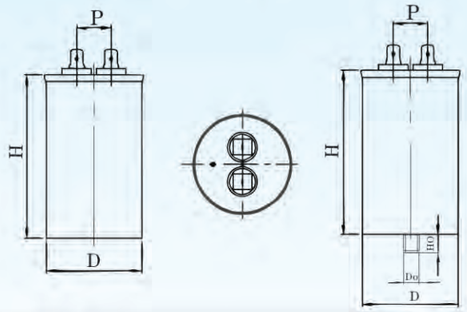



Features 特点

适用于频率为50Hz/60Hz交流电源供电的单相电动机起动和运转。
有自愈性。
高稳定性，可靠性。
防爆设计，更安全。
圆形电容器，可提供椭圆形电容器。
单式电容器，可提供复合电容器。

Widely applied to the starting and running of AC single-phase motors at 50Hz/60Hz frequency power.
Self-healing property.
Good stability and reliability.
Safer with Anti-explosion design.
Round capacitor, can be provided oval capacitor.
Single capacitor, can be provided double capacitor.

Specifications 技术要求

引用标准 Reference standards	GB/T 3667.1（ IEC60252-1）
气候类别 Climatic category	40 / 70 / 21、40 / 85 / 21
运行等级 Class of operation	Class B (10000h)　Class C (3000h)
安全防护等级 Class of safety protection	S2
电压范围 Voltage range	250VAC、370VAC、440VAC、450VAC
容量范围 Capacitance range	2～100 μ F
电容量偏差 Capacitance tolerance	± 5% 、 ± 10%、± 15%
损耗角正切 Dissipation factor	20 x10^{-4} (100Hz,20°C)
端子间测试电压Test voltage terminal to terminal U_{TT}	2 Un for 2 seconds
端子与外壳间测试电压Test voltage terminal to case U_{TC}	(2Un+1000)VAC or 2000VAC- 50Hz for 60 seconds
绝缘电阻 Insulation Resistance	≥3000s (100Hz，20°C，1min)

Dimensions(mm)外形尺寸

序号 NO.	产品规格 Production specifications	端子 Terminal	外壳尺寸 Size
1	CBB65-450VAC 5μF ～9μF	2*4 或 2*2 插片	Φ40*60
2	CBB65-450VAC-10μF	2*4 或 2*2 插片	Φ40*60
3	CBB65-450VAC-12.5μF	2*4 或 2*2 插片	Φ40*75
4	CBB65-450VAC-15μF	2*4 或 2*2 插片	Φ45*75
5	CBB65-450VAC-20μF	2*4 或 2*2 插片	Φ50*75
6	CBB65-450VAC-25μF	2*4 或 2*2 插片	Φ50*85
7	CBB65-450VAC-30μF	2*4 或 2*2 插片	Φ50*100
8	CBB65-450VAC-35μF	2*4 或 2*2 插片	Φ50*100
9	CBB65-450VAC-40μF	2*4 或 2*2 插片	Φ50*100
10	CBB65-450VAC-45μF	2*4 或 2*2 插片	Φ50*100
11	CBB65-450VAC-50μF	2*4 或 2*2 插片	Φ50*125
12	CBB65-450VAC-55μF	2*4 或 2*2 插片	Φ50*125
13	CBB65-450VAC-60μF	2*4 或 2*2 插片	Φ50*125
14	CBB65-450VAC-65μF	2*4 或 2*2 插片	Φ55*125
15	CBB65-450VAC-70μF	2*4 或 2*2 插片	Φ55*125
16	CBB65-450VAC-80μF	2*4 或 2*2 插片	Φ60*125
17	CBB65-450VAC-90μF	2*4 或 2*2 插片	Φ60*125
18	CBB65-450VAC-100μF	2*4 或 2*2 插片	Φ63.5*125

注：表中以外的规格和尺寸、端子，可以商谈。
Note: Other specifications and size、terminal outside table are negotiable.

CBB61交流电动机电容器(塑料外壳)

CBB61 AC Motor Capacitor (Plastic case)

Outline Drawing 外形图

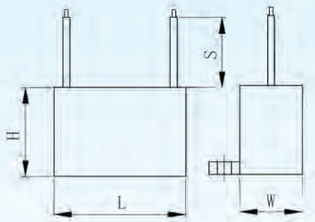

Insulated flexible brass wires
绝缘软铜线

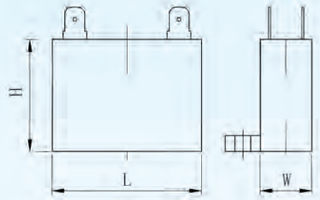

Tabs
插片



Features 特点

- 适用于频率为50Hz/60Hz交流电源供电的单相电动机起动和运转。
- 有自愈性。
- 高稳定性，可靠性。

- Widely applied to the starting and running of AC single-phase motors at 50Hz/60Hz frequency power.
- Self-healing property.
- Good stability and reliability.

Specifications 技术要求

引用标准 Reference standards	GB/T 3667.1（ IEC60252-1）
气候类别 Climatic category	40 / 70 / 21、40 / 85 / 21
运行等级 Class of operation	Class B (10000h)　Class C (3000h)
安全防护等级 Class of safety protection	S0/S3
电压范围 Voltage range	250VAC、370VAC、440VAC、450VAC
容量范围 Capacitance range	1～35μF
电容量偏差 Capacitance tolerance	±5% 、 ±10%、±15%
损耗角正切 Dissipation factor	20 x10^{-4} (100Hz,20°C)
端子间测试电压Test voltage terminal to terminal U_{TT}	2Un for 2 seconds
端子与外壳间测试电压Test voltage terminal to case U_{TC}	(2Un+1000)VAC or 2000VAC- 50Hz for 60 seconds
绝缘电阻 Insulation resistance	≥3000s (100Hz，20°C，1min)

Dimensions(mm)外形尺寸

规格 Specifications	450VAC	250VAC
1μF	37×13×23	37×13×23
1.2μF	37×13×23	37×13×23
1.5μF	37×14×25	37×13×23
2μF	37×16×28	37×13×23
2.5μF	37×18×28	37×14×25
3μF	47×18×29	37×14×25
3.5μF	47×18×34	37×16×28
4μF	47×18×34	37×16×28
4.5μF	47×22×34	37×16×28
5μF	47×22×34	37×18×28
5.5μF	47×22×34	37×18×28
6μF	47×22×34	47×18×29
6.5μF	48×26×38	47×18×29
7μF	48×26×38	47×18×29
8μF	48×26×38	47×18×34
10μF	58×26×44	47×22×34
12μF	58×26×44	47×22×34
15μF	58×26×44	47×22×34
16μF	58×26×44	48×26×38
20μF	58×35×49	48×26×38
25μF	58×35×49	48×26×38
30μF	商定 negotiable	58×26×44
35μF	商定 negotiable	58×26×44

注：表中以外的规格和尺寸、端子，可以商谈。
Note: Other specifications、size and terminal outside table are negotiable.

CBB60交流电动机电容器(圆柱形、塑料外壳)
CBB60 AC Motor Capacitor (Column，Plastic case)

Outline Drawing 外形图

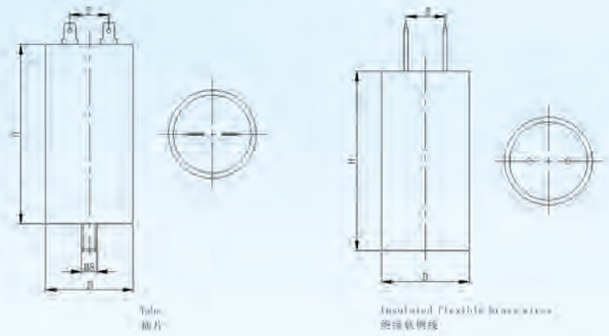



Features 特点

- 适用于频率为50Hz/60Hz交流电源供电的单相电动机起动和运转。
- 有自愈性。
- 高稳定性，可靠性。

- Widely applied to the starting and running of AC single-phase motors. at 50Hz/60Hz frequency power.
- Self-healing property.
- Good stability and reliability.

Specifications 技术要求

引用标准 Reference standards	GB/T 3667.1（ IEC60252-1）
气候类别 Climatic category	40 / 70 / 21、40 / 85 / 21
运行等级 Class of operation	Class B (10000h)　Class C (3000h)
安全防护等级 Class of safety protection	S0/S3
电压范围 Voltage range	250VAC、370VAC、440VAC、450VAC
容量范围 Capacitance range	1～60μF
电容量偏差 Capacitance tolerance	±5% 、 ±10%、±15%
损耗角正切 Dissipation factor	20 x10^{-4} (100Hz,20°C)
端子间测试电压Test voltage terminal to terminal U_{TT}	2Un for 2 seconds
端子与外壳间测试电压Test voltage terminal to case U_{TC}	(2Un+1000)VAC or 2000VAC- 50Hz for 60 seconds
绝缘电阻 Insulation resistance	≥3000s (100Hz，20°C，1min)

Dimensions(mm)外形尺寸

规格 Specifications	常规型 Routine		加螺杆或插片 With screws or pins	
	450VAC	250VAC	450VAC	250VAC
1 μF	Φ 26*52	Φ 26*52	Φ 30*52	Φ 30*52
2 μF	Φ 26*52	Φ 26*52	Φ 30*52	Φ 30*52
2. 5 μF	Φ 26*52	Φ 26*52	Φ 30*52	Φ 30*52
3 μF	Φ 26*52	Φ 26*52	Φ 30*52	Φ 30*52
3. 5 μF	Φ 26*52	Φ 26*52	Φ 30*59	Φ 30*52
4 μF	Φ 28. 5*55	Φ 26*52	Φ 35*62	Φ 30*52
4. 5 μF	Φ 28. 5*55	Φ 26*52	Φ 35*62	Φ 30*52
5 μF	Φ 28. 5*55	Φ 26*52	Φ 35*62	Φ 30*52
5. 5 μF	Φ 34*62	Φ 26*52	Φ 35*62	Φ 30*52
6 μF	Φ 34*62	Φ 26*52	Φ 35*62	Φ 30*52
6. 5 μF	Φ 34*62	Φ 26*52	Φ 35*62	Φ 30*52
7 μF	Φ 34*62	Φ 26*52	Φ 35*62	Φ 30*52
8 μF	Φ 34*62	Φ 26*52	Φ 35*62	Φ 30*52
9 μF	Φ 34*62	Φ 26*52	Φ 35*62	Φ 30*52
10 μF	Φ 34*62	Φ 26*52	Φ 35*72	Φ 30*52
12 μF	Φ 37*73	Φ 26*52	Φ 35*72	Φ 30*61
14 μF	Φ 37*73	Φ 34*62	Φ 40*72	Φ 30*61
15 μF	Φ 37*73	Φ 34*62	Φ 40*72	Φ 30*61
16 μF	Φ 37*73	Φ 34*62	Φ 40*72	Φ 30*61
18 μF	Φ 37*73	Φ 34*62	Φ 40*72	Φ 35*67
20 μF	Φ 40*72	Φ 34*62	Φ 40*72	Φ 35*67
25 μF	Φ 42*80	Φ 42*62	Φ 40*72	Φ 35*67
30 μF	Φ 42*90	Φ 40*72	Φ 45*95	Φ 40*72
35 μF	Φ 45*90	Φ 40*72	Φ 45*95	Φ 40*72
40 μF	Φ 50*100	Φ 42*90	Φ 50*110	Φ 40*97
45 μF	Φ 50*100	Φ 42*90	Φ 50*110	Φ 40*97
50 μF	Φ 50*100	Φ 42*90	Φ 50*120	Φ 40*97
60 μF	Φ 50*115	Φ 42*90	Φ 50*120	Φ 40*97

④ 注：表中以外的规格和尺寸、端子，可以商谈。
④ Note: Other specifications、size and terminal outside table are negotiable.

光伏风电圆柱直流滤波电容器
DC-LINK Capacitor (Photovoltaic wind power cylinder)

Outline Drawing 外形图

Drawing A:



Drawing B:





Drawing C:



Drawing D:





Features 特 点

- 应用于直流滤波电路中，可替代电解电容。
- 等效串联电阻小，能承受较大的纹波电流。
- 自感小。
- 有自愈性。
- 寿命长。
- 铝壳，树酯灌封。

- Used in DC-Link filter circuits, can replace electrolytic capacitor.
- Low ESR, high ripple current handling capabilities.
- Low Inductance.
- Self-healing property.
- Long lifetime.
- Aluminum case, resin filled.

Applications 应用场合

- 风能发电、太阳能发电用或其它工业用变频器。
- 直流支撑滤波电路。

- Used in wind power, solar power or other industrial frequency converters.
- Used in DC support filter circuit.

Technical specification 技术参数

Cn (μF)	Rs (mΩ)	I_{max} (A)	Î (KA)	W_N (Ws)	Ls (nH)	D x L (mm)	Drawing	m (Kg)	Order No.
Un 700VDC	Us 1050v		Ur 200V		U t-t 1050 VDC				Ut-c 3000 VAC
370	2.1	40	2.0	86	50	Φ76 x 130	A、B、C、D	0.7	AG.H13 0K70-3706D76
440	1.8	40	2.3	103	50	Φ76 x 145	A、B、C、D	0.8	AG.H14 0K70-4406D76
470	1.7	55	2.5	110	40	Φ86x 130	A、B、C、D	0.9	AG.H13 0K70-4706D86
560	1.4	40	3.0	132	60	Φ76 x 181	A、B、C、D	1.0	AG.H18 0K70-5606D76
590	1.3	55	3.1	137	40	Φ86x 145	A、B、C、D	1.0	AG.H14 0K70-5906D86
730	1.1	55	3.9	171	50	Φ86x 181	A、B、C、D	1.2	AG.H18 0K70-7306D86
1030	1.0	55	5.1	252	70	Φ86x 225	A、B、C、D	1.5	AG.H22 0K70-1037D86
Un 900VDC	Us 1350v		Ur 200V		U t-t 1350 VDC				Ut-c 3000 VAC
350	2.1	40	2.0	148	50	Φ76 x 130	A、B、C、D	0.7	AG.H13 0K90-3506D76
410	1.2	40	2.3	178	50	Φ76X135	A、B、C、D	0.8	AG.H13 0K90-4106D76
470	1.0	55	2.5	191	40	Φ86X135	A、B、C、D	0.9	AG.H13 0K90-4706D86
540	1.4	40	3.0	229	60	Φ76 x 181	A、B、C、D	1.0	AG.H18 0K90-5406D76
560	1.3	55	3.1	238	40	Φ86x 145	A、B、C、D	1.0	AG.H14 0K90-5606D86
700	1.1	55	3.9	297	50	Φ86x 181	A、B、C、D	1.2	AG.H18 0K90-7006D86
1020	1.0	60	5.1	413	70	Φ86x 225	A、B、C、D	1.5	AG.H22 0K90-1027D86
Un 1100VDC	Us 1650v		Ur 250V		U t-t 1650 VDC				Ut-c 3000 VAC
240	3.3	50	1.5	170	50	Φ76 x 130	A、B、C、D	0.7	AG.H13 1K10-2406D76
300	2.6	50	1.9	216	60	Φ76 x 145	A、B、C、D	0.8	AG.H14 1K10-3006D76
320	2.4	65	2.0	232	40	Φ86x 130	A、B、C、D	0.9	AG.H13 1K10-3206D86
380	2.2	50	2.3	270	60	Φ76 x 181	A、B、C、D	1.0	AG.H18 1K10-3806D76
400	**2.0**	**65**	**4.2**	**242**	**50**	**Φ86X156**	**A、B、C、D**	**1.2**	**AG.H15 1K10-4006D86**
500	**1.5**	**70**	**6.0**	**303**	**60**	**Φ86X186**	**A、B、C、D**	**1.3**	**AG.H18 1K10-5006D86**
600	1.6	60	4.2	363	70	Φ86x 225	A、B、C、D	1.5	AG.H22 1K10-6006D86
1200	0.9	100	7.8	726	80	Φ120x 230	A、B、C、D	2.5	AG.H23 1K10-1207D120
Un 1200VDC	Us 1800v		Ur 250V		U t-t 1800 VDC				Ut-c 3000 VAC
320	2.5	62	2.88	230	65	Φ76x 155	A、B、C、D	1.1	AG.H15 1K20-3206D76
420	**1.8**	**65**	**2.97**	**238**	**50**	**Φ86x 175**	**A、B、C、D**	**1.2**	**AG.H17 1K20-4206D86**
470	**1.7**	**65**	**4.00**	**338**	**60**	**Φ86x 195**	**A、B、C、D**	**1.5**	**AG.H19 1K20-4706D86**
Un 1300VDC	Us 1950v		Ur 300V		U t-t 1950 VDC				Ut-c 3000 VAC
160	2.1	40	1.8	138	50	Φ76 x 130	A、B、C、D	0.7	AG.H13 1K30-1606D76
200	2.2	40	2.0	168	60	Φ76 x 145	A、B、C、D	0.8	AG.H14 1K30-2006D76
220	2.0	50	2.2	185	40	Φ86x 130	A、B、C、D	0.9	AG.H13 1K30-2206D86
250	2.1	40	2.4	208	60	Φ76 x 181	A、B、C、D	1.0	AG.H18 1K30-2506D76
270	1.4	50	2.6	227	50	Φ86x 145	A、B、C、D	1.0	AG.H14 1K30-2706D86
330	1.6	50	3.0	281	60	Φ86x 181	A、B、C、D	1.2	AG.H18 1K30-3306D86
460	2.1	60	4.1	390	70	Φ86x 225	A、B、C、D	1.5	AG.H22 1K30-4606D86

CBB15 CBB16 逆变焊机直流滤波电容器

CBB15 CBB16 Welding inverter DC filter capacitor

Cn (μF)	Rs (mΩ)	I_{max} (A)	Î (KA)	W_N (Ws)	Ls (nH)	D x L (mm)	Drawing	m (Kg)	Order No.
Un 1500VDC Us 2250v Ur 300V U t-t 2250 VDC Ut-c 3000 VAC									
110	2.1	35	1.6	133	50	Φ76 x 130	A、B、C、D	0.7	AG.H13 1K50-1106D76
140	2.2	35	2.0	159	60	Φ76 x 145	A、B、C、D	0.8	AG.H14 1K50-1406D76
150	1.8	45	2.2	174	40	Φ86x 130	A、B、C、D	0.9	AG.H13 1K50-1506D86
190	1.7	35	2.8	217	60	Φ76 x 181	A、B、C、D	1.0	AG.H18 1K50-1906D76
250	1.3	45	3.5	278	50	Φ86x 181	A、B、C、D	1.2	AG.H18 1K50-2506D86
345	1.9	60	5.0	389	70	Φ86x 225	A、B、C、D	1.5	AG.H22 1K50-3456D86
Un 1800VDC Us 2700v Ur 400V U t-t 2700 VDC Ut-c 3000 VAC									
120	1.6	50	1.8	198	50	Φ86 x 130	A、B、C、D	0.9	AG.H13 1K80-1206D86
140	2.0	40	2.0	226	60	Φ76 x 181	A、B、C、D	0.9	AG.H18 1K80-1406D76
185	1.4	50	2.5	299	60	Φ86 x 181	A、B、C、D	1.2	AG.H18 1K80-1856D86
260	2.4	60	3.0	242	70	Φ86 x 225	A、B、C、D	1.5	AG.H22 1K80-2606D86
Un 2200VDC Us 3200v Ur 500V U t-t 3200 VDC Ut-c 4000 VAC									
75	1.4	50	2.2	222	50	Φ86 x 130	A、B、C、D	0.9	AG.H13 2K20-7505D86
90	2.0	40	3.2	260	60	Φ76 x 181	A、B、C、D	1.0	AG.H18 2K20-9005D76
120	1.2	50	3.5	346	60	Φ86 x 181	A、B、C、D	1.2	AG.H18 2K20-1206D86
165	1.9	60	4.5	477	70	Φ86 x 225	A、B、C、D	1.5	AG.H22 2K20-1656D86
Un 2600VDC Us 4000v Ur 700V U t-t 4000 VDC Ut-c 4500 VAC									
50	1.4	50	1.6	181	50	Φ86 x 130	A、B、C、D	0.9	AG.H13 2K60-5005D86
65	1.5	40	2.0	218	60	Φ76 x 181	A、B、C、D	1.0	AG.H18 2K60-6505D76
80	1.2	50	2.5	283	60	Φ86 x 181	A、B、C、D	1.2	AG.H18 2K60-8005D86
115	2.0	60	3.3	392	70	Φ86 x 225	A、B、C、D	1.5	AG.H22 2K60-1156D86

注：表中以外的规格和尺寸，可以商谈。

Note: Other specifications and size outside table are negotiable.

Outline Drawing 外形图

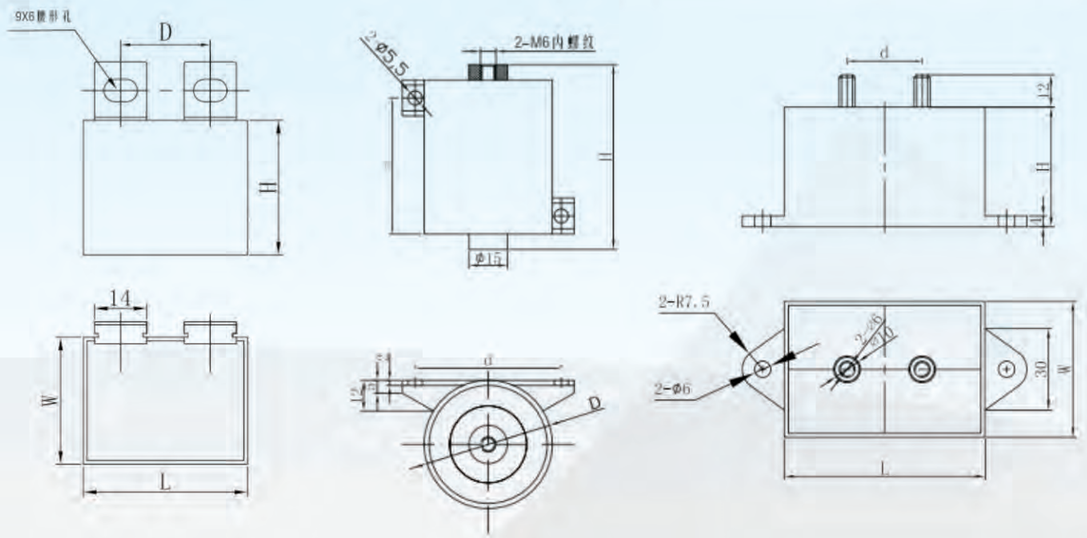





储能脉冲直流滤波电容器

Energy storage， Pulsed， DC-Link Filter Capacitor

Features 特 点

- 应用于大功率高频开关电源中高频脉冲电流吸收、滤波。
- 等效串联电阻小，能承受较大的纹波电流和大电流冲击。
- 自感小，高频特性好。
- 有自愈性。
- 寿命长。
- 塑料外壳，树酯灌封。

- Used in high-power high-frequency switching power supply for high-frequency pulse current absorption, filter.
- Low ESR, high ripple current and large current shock handling capabilities.
- Low Ls,good high frequency characteristics.
- Self-healing property.
- Long lifetime.
- Plastic case, resin filled.

Applications 应用场合

- 用于高频开关电源中滤波、吸收、隔直、谐振电路。
- 用于EMI电路，如高频逆变焊机、UPS、电动汽车等。

- Used in filter, absorption, blocking, resonance circuits of high-frequency switching power supply.
- Widely applied to EMI, such as high frequency welding inverter, UPS, electric vehicles, etc.

Technical specification 技术参数

Cn (μF)	Un (V)	Imax (A)	dv/dt (V/μs)	Ls (nH)	U t-t (V)	U t-c (V)	tg δ (20℃,10kHz)	Size (mm)
CBB15(SFPEC)								
0.47	1200VDC	7	1200	≤10	1800V, 10S	3000VAC,60S	$\leqslant 10\times10^{-4}$	46×18×34
1	1200VDC	15	1200	≤10	1800V, 10S	3000VAC,60S	$\leqslant 10\times10^{-4}$	46×34×36
2	1200VDC	25	1200	≤10	1800V, 10S	3000VAC,60S	$\leqslant 10\times10^{-4}$	50×46×50
3	1200VDC	35	1200	≤10	1800V, 10S	3000VAC,60S	$\leqslant 10\times10^{-4}$	50×46×50
30	1250VDC	30	200	≤10	1800V, 10S	3000VAC,60S	$\leqslant 100\times10^{-4}$	74×46×49
40	1250VDC	40	200	≤10	1800V, 10S	3000VAC,60S	$\leqslant 100\times10^{-4}$	75×50×44
CBB16(SFPEC)								
2	500VAC	25	1200	≤10	1800V, 10S	3000VAC,60S	$\leqslant 10\times10^{-4}$	φ63×49
3	500VAC	35	1200	≤10	1800V, 10S	3000VAC,60S	$\leqslant 10\times10^{-4}$	φ63×49
4	500VAC	50	1200	≤10	1800V, 10S	3000VAC,60S	$\leqslant 10\times10^{-4}$	φ63×49
5	500VAC	60	1300	≤10	1800V, 10S	3000VAC,60S	$\leqslant 10\times10^{-4}$	φ63×49
6	500VAC	80	1400	≤10	1800V, 10S	3000VAC,60S	$\leqslant 10\times10^{-4}$	φ76×49
10	1400VDC	6	200	≤10	1800V, 10S	3000VAC,60S	$\leqslant 30\times10^{-4}$	φ50×60
20	1400VDC	10	200	≤10	1800V, 10S	3000VAC,60S	$\leqslant 50\times10^{-4}$	φ50×60
50	350VDC	14	200	≤10	600V, 10S	3000VAC,60S	$\leqslant 55\times10^{-4}$	φ50×60
40	800VDC	10	200	≤10	1200V, 10S	3000VAC,60S	$\leqslant 30\times10^{-4}$	φ40×60
60	800VDC	15	200	≤10	1200V, 10S	3000VAC,60S	$\leqslant 30\times10^{-4}$	φ50×60
100	800VDC	28	200	≤10	1200V, 10S	3000VAC,60S	$\leqslant 30\times10^{-4}$	φ62×60
200	800VDC	26	200	≤10	1200V, 10S	3000VAC,60S	$\leqslant 30\times10^{-4}$	φ60×110

注：表中以外的规格和尺寸，可以商谈。
Note: Other specifications and size outside table are negotiable.

Outline Drawing 外形图

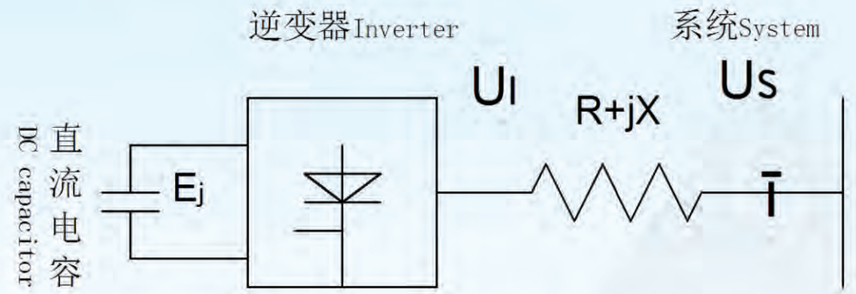

SVG单相等效电路图
SVG single-phase equivalent circuit

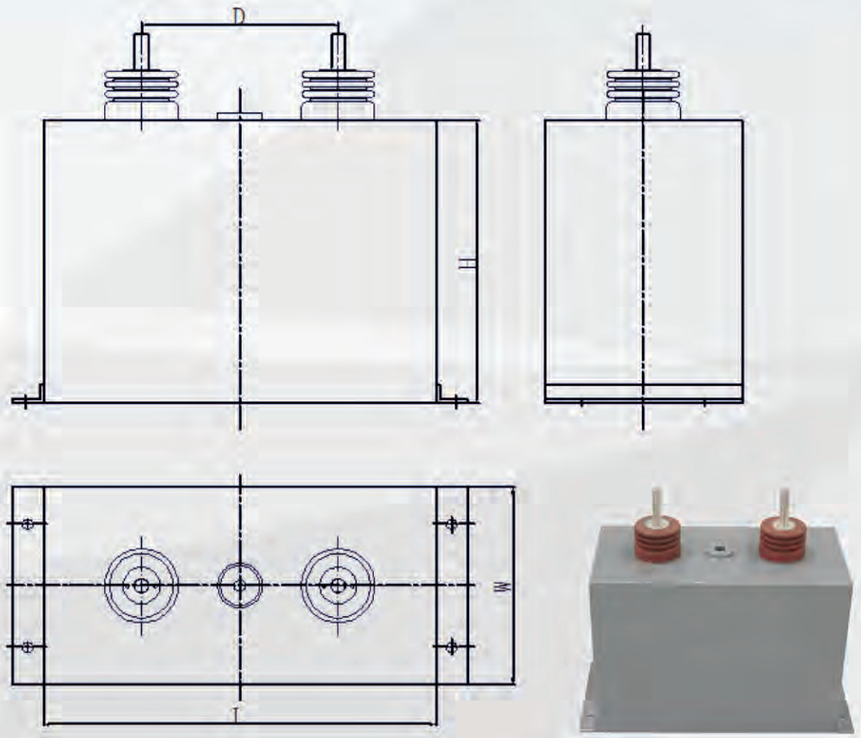

Features 特 点

- 高比能密度，电容器储能强。
- 等效串联电阻小，能承受较大的纹波电流和大峰值电流冲击。
- 自感低，dv/dt大，频率特性好。
- 有自愈性。
- 寿命长，lifetime≥10万小时。
- 高真空注油，散热性好，电容器性能稳定可靠。
- 大容量。
- 高导热系数。

- High specific energy density, strong energy storage of the capacitors.
- Low ESR, high ripple current and large peak current shock handling capabilities.
- Low inductance, large dv/dt, good frequency characteristics.
- Self-healing property.
- Long lifetime(≥100,000h).
- High vacuum oiling ,good heat dissipation, stable and reliable performance of the capacitors.
- Huge capacitance.
- High thermal conductivity.

Applications 应用场合

- 用于轨道交通牵引或船舶驱动变流器。
- 用于各类大功率工业逆变器，如高压变频传动装置。
- 用于电网谐波治理、SVG设备。

- Used in rail transit traction or ship drive converter.
- Used in various high-power industrial inverters, such as high-voltage variable frequency drive device.
- Used in power harmonic governance and SVG equipment.

Technical specification 技术参数

序 号	额定电压 VDC	额定容量μf	长*宽*高 mm	有效电流A	序 号	额定电压 VDC	额定容量μf	长*宽*高 mm	有效电流A
1	1000	500	180*100*160	50	24	1600	400	240*120*160	45
2	1000	100	230*100*210	95	25	1600	800	240*120*270	87
3	1000	1500	250*120*220	108	26	1600	1000	290*120*265	109
4	1000	2000	250*120*270	144	27	1600	1200	340*120*270	130
5	1000	2200	280*120*260	159	28	1600	2400	340*120*480	263
6	1000	2400	300*120*270	173	29	1800	1000	320*120*290	122
7	1000	3000	340*120*320	217	30	1800	2000	320*120*530	220
8	1000	3500	450*120*320	250	31	2000	500	320*120*230	75
9	1000	4700	350*120*430	335	32	2000	1000	320*120*410	150
10	1000	5000	240*100*160	358	33	2000	2000	380*120*650	300
11	1200	500	230*120*210	57	34	2500	250	230*120*210	40
12	1200	1000	280*120*210	83	35	2500	500	310*120*290	80
13	1200	1200	320*120*230	100	36	2500	1000	340*120*480	166
14	1200	1500	340*120*265	127	37	3000	250	230*120*260	48
15	1200	2000	320*120*340	166	38	3000	500	350*120*325	96
16	1200	2500	340*120*340	200	39	3000	1000	350*120*600	190
17	1200	4000	340*120*480	330	40	3500	250	350*120*270	60
18	1500	500	230*120*160	48	41	3500	500	350*120*490	120
19	1500	1000	300*120*260	95	42	4000	250	380*120*350	73
20	1500	1500	350*120*260	144	43	4000	500	380*120*650	150
21	1500	2000	350*120*325	192	44	5000	200	320*120*375	65
22	1500	2500	360*120*390	240	45	5000	250	500*120*320	80
23	1500	3200	350*120*490	308	46	5000	500	520*230*320	164

注：表中以外的规格和尺寸，可以商谈。
Note: Other specifications and size outside table are negotiable.

SaiFu® 赛福电容 SAFE ELECTRONICS

Part Number System 产品编码说明

SFPEO	2K00	-1007	-019
型号 Type	额定电压 Rated Voltage	额定容量 Rated Capacitance	客户代码 Customer Code

Technology performance characteristics 技术与性能特性

标准Reference standards	IEC 61071、 IEC61881
运行温度（热点温度）Operating Temperature（hot spot）	-40°C to +70°C
存储温度Storage temperature	-40°C to +85°C
热点温度$\Theta_{HOTSPOT}$	+70°C(oil)、+85°C(dry)
电容器公差Capacitance tolerance	± 5% or ± 10%
损耗tanδ	3 x10^{-3} (100Hz,20°C)
端子间测试电压Test voltage terminal to terminal U_{TT}	(1.3～1.5) Un for 10 seconds
端子与外壳间测试电压Test voltage terminal to case U_{TC}	(2Un+1000)VAC - 50Hz for 60 seconds
允许的相对湿度Permissible relative humidity	年平均湿度75%，30天/年 75%Annual average ≤ on 30 days / year
气候类别IEC climatic category IEC	40 / 85 / 21
在–25°C to +70°C温度下工作时允许容量变化值 Capacitance deviation in the operating temperature range of –25°C to +70 °C	最大偏差±1.5%相对于20°C 测量值 ±1.5% max on capacitance value measured at +20°C
外壳成分Case components	铝外壳、塑料外壳、304 不锈钢外壳 Aluminium、plastic、304 stainless steel
端子Terminals	镀锡铜螺杆Tinned brass fastons or screws
安装位置Installation	任意位置Whatever Position
预期寿命Life expectancy	≥ 100.000 hours at Un
失效率Failure rate	50 FIT
推荐的连接扭矩Recommended torque for screw connections	内螺纹 Internal thread M6-3Nm,M8-6Nm

Application guide for capacitor 电容器应用指南

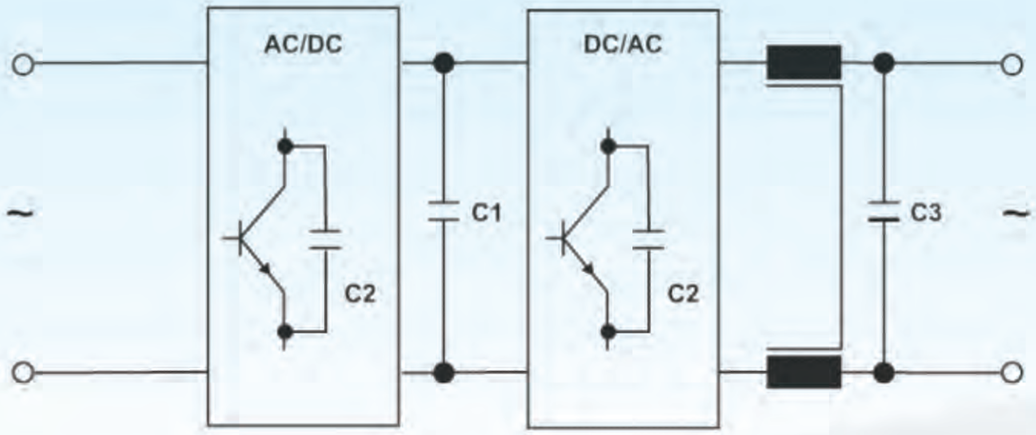

序号NO.	功能Function	产品系列Product range
C1	直流滤波DC Link	SFPEC AG、SFPEC PG
C2	IGBT吸收IGBT Snubber	CBB15、CBB16
C3	交流滤波AC Filter	CBB65、CBB60、CBB61

电容器的可靠性不仅取决于电容器本身的可靠性因素，而且还取决于正确的选型与合理的使用，为保证产品能够达到预定的用途和可靠性，以供使用者参考。

订购或索要样品时，请尽量提供以下信息：

1、应用场合：如UPS、变频器、整流器等；

2、额定电容量及允许偏差；

3、电压：包括额定电压、工作电压、纹波电压、非周期冲击电压等；

The reliability of capacitors depends not only depends on the reliability factors of the capacitor itself, but also on correct selection and reasonable use, to ensure that the product can achieve the intended use and reliability for users' reference.

Ordering or requesting samples, please try to provide the following information if possible :

1. Application: e.g. UPS, transducer, rectifier etc.

2. Rated capacitance and tolerance

3. Voltage: including rated voltage, working voltage, ripple voltage, non periodic impact voltage etc.

Application guide for capacitor 电容器应用指南

4、电流：包括最大电流、工作电流、最大峰值电流、最大冲击电流等；

5、频率：包括工作频率，脉冲频率，纹波电压的频率等；

6、工作场所：如固定场所、车辆、船舶等；

7、工作环境：如温度范围、湿度、海拔等；

8、产品尺寸：如直径、高度或长度、宽度、高度等；

9、端子类型：如螺栓式、螺孔式等；

10、安全要求：如阻燃、防爆等；

11、预期寿命：在给定的工作条件下的预期寿命；

12、安装方式：如底部螺栓、中部卡圈、安装耳等；

13、其它。

4. Current: including maximum current, working current, maximum peak current, maximum impact current etc.

5. Frequency: including working frequency, pulse Frequency, ripple voltage frequency etc

6. Working place : e.g.fixed place , vehicles, ships etc.

7. Working environment: e.g. temperature range, humidity, altitude etc.

8. Product dimensions: e.g. diameter, height or length, width, height etc.

9. Terminal type: e.g. Bolt type, screw hole type etc.

10. Safety requirements: e.g. flame retardant, anti-explosion etc.

11. Life expectancy: under given working conditions.

12. Installation: e.g. bottom-stud, middle-clip, mounting ears etc.

13. Others

电容器功用
Functions of capacitor

电力电子电容器具有广阔的应用范围，目前主要用于平缓非正弦电压和脉冲电流值，直流与交流都可以应用。交流电容器在交流电压使用中进行高频电压过滤，直流电容器在运行期间重复周期性的充电与放电。

Power electronics capacitors have widely applications, now mainly used for gentling non-sinusoidal voltage and pulse current values, and can be applied to both AC and DC circuits. AC capacitor uses high-frequency voltage filtering in AC voltage , DC capacitors repeat periodic charging and discharging during operation.

交流电容器不同的应用范围
Different application scopes of AC capacitors

交流应用

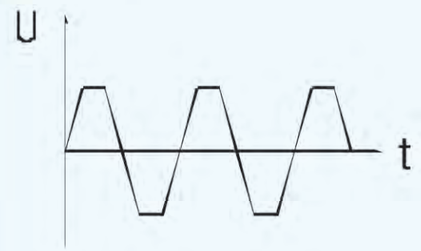

交流电容器与电抗器一起在电路中起阻尼作用，在功率半导体转换开关时去除尖峰电压，对半导体器件进行过压保护。

此外，交流电容器还用于调制电路中调制波形，而脉冲放电电容器，应用于充磁设备上吸收反峰电压。

AC application

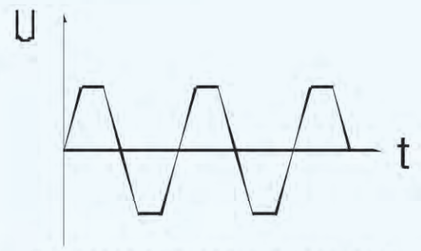

AC capacitors and the reactor play a damping role in the circuit to remove the peak voliage in the power semiconductor switching and to protect semiconductor switches from overvoltages.

AC capacitors are also used for modulating waveform in modulation circuit, while pulse discharge capacitor is used to absorb anti-peak voltage on the magnetizing equipment.

直流电容器不同的应用范围
Different application scopes of DC capacitors

直流应用

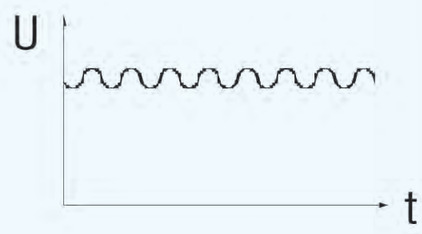

滤波电容器在电力电子变流中起直流电压支撑和直流侧电压滤波、储能功效。使直流侧电压稳定，同时滤除因功率器件开关引发的高频谐波。

脉冲储能放电电容器实现能量储存，然后瞬间释放能量，产生很大的放电冲击电流。通常运用于高能物理实验和工业充退磁设备中。

DC application

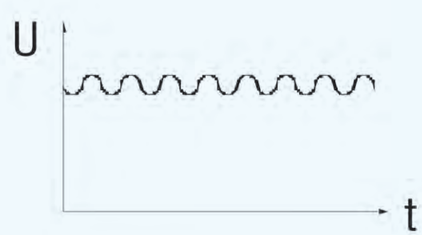

Filter capacitor can take an effect in supporting DC voltage, filtering DC side voltage , and storing energy in the power electronics converter.It makes DC side voltage stable, meanwhile filtering the high frequency harmonic caused by power device switching.

Pulse energy storage discharge capacitor can store energy and then release it instantaneously which will generate huge discharging surge current. It is usually used in the experiments of high energy physics and industrial equipment of magnetization and demagnetization.

注意事项 Application Notes

1、工作电压

薄膜电容器的选用取决于施加的最高电压，并受施加的电压波形、电流波形、频率、环境温度（电容器表面温度）、电容量等因素的影响。使用前请先检查电容器两端的电压波形、电流波形和频率是否在额定值内。

2、工作电流

通过电容器的脉冲（或交流）电流等于电容量C与电压上升速率的乘积，即I=C x dV/dt。

由于电容器存在损耗，在高频或高脉冲条件下使用时，通过电容器的脉冲（或交流）电流会使电容器自身发热而有温升，将会有热击穿（冒烟、起火）的危险。因此，电容器安全使用条件不仅受额定电压（或类别电压）的限制，而且受额定电流的限制。

1. Operation voltage

The selection of Film Capacitor depends on maximum voltage, and is affected by the applied voltage waveform, current waveform, frequency, ambient temperature (capacitor surface temperature), the electric capacity and other factors. Before you use, please check the voltage waveform, current waveform and frequency on both ends of the capacitor are within the rated value.

2. Operating current

By the pulses (or AC) current of capacitor is equal to the product of capacitance C and the voltage rise rate, that is I = C x dV / dt.

Because of the capacitor loss, when used in conditions of high frequency or high pulse, pulse (or AC)current across the capacitor will cause the capacitor self heating and temperature rise, there will be a risk of thermal breakdown (smoke and fire). Therefore, the safety use of capacitor must be within the rated voltage(or category voltage)and the permissible current.

Basic Knowledge 基础知识

注意事项 Application Notes

额定电流被认为是由击穿模式决定的脉冲电流（峰值电流，即由dV/dt指标所限制的）和连续电流（以峰峰值或有效值表示）组成，当使用时，需确认这两个电流都在允许范围之内。

3、电容器充放电

由于电容器充放电电流取决于电容量和电压上升速率的乘积，即使是低电压充放电，也可能产生大的瞬间充放电电流，这可能会导致电容器性能的损害，比如说短路或开路。当进行充放电时，请串联一个20Ω/V~1000Ω/V或更高的限流电阻，将充放电电流限制在规定的范围内。

另外，在用手操作电容器之前必须对电容器进行充分放电，否则电容器内部残存的能量可能会对操作人员产生致命的伤害。

4、因薄膜振动产生的翁鸣声

电容器的嗡鸣声是由于电容器薄膜受到两电极间库仑力的作用，产生的振动而发出的声音。施加的电压和频率波形失真越严重，所产生的嗡鸣声越大。但这种嗡鸣声对电容器不会产生任何破坏作用。

Rated current is considered consist of pulse current (peak current, limit by the index of dV/dt) determined by the breakdown model and continuous current (expressed in peak or RMS). When using, need to confirm the two current are within the permitted range.

3. Capacitor charging and discharging

Because the charging and discharging current of capacitor is obtained by the product of voltage rise rate(dv/dt) and capacitance, low voltage charging and discharging may also cause deterioration of capacitor such as shorting and open due to sudden charging and discharging current. When charging and discharging, Please connect in series with a 20Ω/V~1000Ω/V or higher current limiting resistor to limit the charging and discharging current in the specified range.

In additional, capacitors must be fully discharged before manual handling. otherwise the internal residual energy of capacitor might cause fatal damage to the operator.

4. Buzzing noise

Any buzzing noise produced by capacitor is caused by the vibration of the film due to the coulomb force that is generated between the electrodes with opposite poles. The more serious distortion about applied voltage and frequency of waveform, the louder buzzing noise will become. But the buzzing noise will not produce any damage to capacitor.

注意事项 Application Notes

5、表面温升(△ θ_{case})

当电容器中通过持续电流时，热量累积会使电容器内部温度升高。当温度超出允许的热点温度时，可能会导致电容器短路甚至燃烧。因此，流经电容器的电流不允许超过产品目录所规定的最大数值，而且有必要监测电容器加载时的温升。

6、阻燃性

尽管在薄膜电容器外封装中使用了耐火性阻燃材料阻燃环氧树脂或塑壳，但外部的持续高温或火焰仍可使电容器芯子变形而产生外封装破裂，导致电容器芯子熔化或燃烧。

7、高湿环境

如果长时间使用在高湿环境下，电容器可能会吸收潮气、电极被氧化，导致电容器损坏。如果是在AC条件下使用，高湿环境将会加剧电晕的影响，从而引起电容量下降、损耗增加。

5. Surface temperature rise ($\triangle\Theta_{case}$)

When continuing current Flows through the capacitor, accumulation of heat will make the internal temperature of the capacitor rises. When the temperature exceeds allowed hot spot temperature, it might cause a short circuit or even burning. Therefore, the current flowing through the capacitor is not allowed to exceed the specified maximum value in product catalogue, it is necessary to monitor temperature rise when capacitor is loaded.

6. Flame retardation

Despite the use of flame retardant epoxy resin or plastic shell in the outer package of film capacitors, continuous external heat or flame will cause capacitor core deformation and outer packaging rupture,resulting capacitor core melt or burn.

7. Humid ambient

If used in humidity environment for a long time, the capacitor may absorb moisture, the electrode is oxidized, resulting in damage to the capacitor. If it is used in AC conditions, humidity environment will strengthen the influence of the corona, leading to electric capacity decrease and loss increase.

Basic Knowledge 基础知识

注意事项 Application Notes

8、储存条件

1、电容器不能储存在腐蚀性的空气环境中，特别是存在氢化物，硫化物、酸、碱、盐、有机溶剂或类似物质时。

2、产品不能暴露在高温和高湿状态．必须保存在以下环境中：（在不拆开原包装的基础上）

温度：不超过85℃

湿度：不超过80% RH，不允许有冷露

储存时间：不超过24个月（从产品包装或产品本体上的日期算起）。

8. Storage conditions:

1. Capacitor must not be stored in corrosive air environment, in particular hydrides, sulphides, acids, alkalis, salts, organic solvents, or similar material.

2.The product should not be exposed to high temperature and high humidity condition. It must be saved in the following conditions: (with original packaging)

Temperature: ≤85℃

Humidity: ≤ 80% RH, no cold dew allowed on the capacitor.

Storage time: ≤24 months(From the date marked on the capacitor's body or the label glued to the package)

常用术语 Common Terms

1、额定容量C_N

电容器在20℃/100Hz下的设计电容量。

2、额定电压U_N

额定交流电压U_{NAC}:设计电容器时所采用的反复型波形的任一极性的最高运行峰值周期电压。

额定直流电压U_{NDC}:在电容器两端施加的平均工作电压和纹波峰值电压之和。

若仅采用交流额定电压或直流额定电压，可直接用U_N来表示；若同时采用这两种额定电压，需用U_{NAC}与U_{NDC}加以区分。

3、有效值电压U_{rms}

电容器在连续运行过程中允许出现的最大正弦交流电压的方均根值。

4、纹波电压U_r

电压单向最大峰–峰交流部分值，该值仅仅适合直流电容。峰–峰值为交流值，或者直流等于2X U_{NAC}。

1.Rated capacitance C_N

Designed capacitance of the capacitor at 20 ℃/100Hz.

2.Rated voltage U_N

Rated AC voltage U_{NAC}:maximum operating peak recurrent voltage of either polarity of a reversing type waveform for which the capacitor has been designed.

Rated DC voltage U_{NDC}:the sum of average voltage and ripple peak voltage at teminals of the applied capacitor.

If only use rated AC voltage or rated DC voltage, U_N can be directly expressed. But if use both rated voltages, we should use both U_{NAC} and U_{NDC} to divide them.

3. RMS voltage U_{rms}

Root mean square value of Maximum sinusoidal AC voltage allowed by capacitors during continuous operation.

4.Ripple voltage U_r

Maximum value of the peak-to-peak alternating component of the unidirectional voltage. This value is stated only for DC-capacitors. The peak-to-peak value of AC- and AC/DC-types is always 2 x U_{NAC}.

Basic Knowledge 基础知识

常用术语 Common Terms

5、非周期冲击电压U_s

由切换或系统中任何别的扰动所导致的峰值电压，此电压只允许出现有限的次数，且每次持续时间应比基本周期短.

6、绝缘电压U_i

设计时端子与外壳之间的交流测试有效值，他是基于U_{t-C}基础上，其计算公式如下:

$$U_i = \frac{U_{t-c} - 1000V}{2}$$

7、最大电流I_{max}

连续运行时的最大电流的方均根值。

8、最大峰值电流 î

在连续运行中允许重复出现的最大峰值电流。其数值为：$\hat{I}=C_N \times (dV/dt)$其中dV/dt表示电压爬升速率，即在运行中允许重复出现的最大电压爬升速率，常用来代替î使用。

9、最大冲击电流$\hat{i}_s$

由切换或系统中任何别的扰动所导致的允许出现的峰值电流，此电流只允许出现有限的次数，且每次持续时间应比基本周期短。

5.Non-recurrent surge voltage U_s

Peak voltage induced by switching or any other disturbance of the system is allowed for a limited number of times and shorter durations than the basic period.

6.Insulation voltage U_i

rms value of the AC voltage for which the terminals to case insulation has been designed and tested. Based on the test voltage U_{t-C} stated in the catalogue, Ui can be calculated as follows:

$$U_i = \frac{U_{t-c} - 1000V}{2}$$

7.Maximum current I_{max}

Maximum rms current for continuous operation.

8.Maximum peak current î

Maximum permitted repetitive peak current that can occur during continuous operation. The value is following: $\hat{i}=C_N \times (dV/dt)$

Where dv/dt indicates rate of voltage rise, which means maximum permitted repetitive rate of voltage rise of operational voltage, usually using instead of î.

9.Maximum surge current $\hat{i}_s$

Peak non-repetitive current induced by switching or any other disturbance of the system which is allowed for a limited number of times, for durations shorted than basic period.

常用术语 Common Terms

10、串联电阻R_s

在规定的运行条件下，电容器的导体部分的等效内阻。温度不同，R_s也不相同，一般来讲：

Rs(70℃)=1.2 × R_s(20℃),

Rs (85℃)=1.25 x R_s(20℃)。

11、等效串联电阻ESR

一个有效电阻，当它和所探讨的电容器有相等电容值的理想电容器串联时，在规定的运行条件下，该电阻的损耗功率将等于该电容器中耗散的有功功率。

12、介质损耗因素tg δ_0

电容器的介质材料在额定频率下的损耗常数。聚丙烯薄膜的典型介质损耗因素为 2×10^{-4}。

13、电容器的损耗因素tg δ

在规定频率的正弦波电压作用下，电容器的损耗功率除以电容器的无功功率、其值为等效串联电阻和容抗之比。

14、自感L_s

10. Series resistance R_s

Effective ohmic resistance of the conductors of a capacitor under specified operating conditions. It depends on temperature. Generally speaking:

Rs (70℃) =1.2 x R_s(20℃),

Rs (85℃)=1.25 x R_s(20℃)

11. Equivalent series resistance ESR

Effective resistance which, if connected in series with an ideal capacitor of capacitance value equal to that of the capacitor in question, would have a power loss equal to active power dissipated in that capacitor under specified operating conditions.

12. Dielectric dissipation factor tgδ_0

Constant dissipation factor of the dielectric material for all capacitors at their rated frequency. The typical loss factor of polypropylene film is 2×10^{-4}.

13. Loss factor of the capacitor tgδ

The dissipation factor is ratio between reactive power of the impedance of the capacitor and effective power when capacitor is submitted to a sinusoidal voltage of specified frequency, it is that ratio between the equivalent series resistance and the capacitive reactance of a capacitor.

14. Self-inductance L_s

Basic Knowledge 基础知识

常用术语 Common Terms

电容器由于自身结构或组成的原因所表现出来的电感。

15、谐振频率f_r

电容器的阻抗成为最小时的最低频率。其值为: $f_r=2\pi \times \sqrt{LsxCn}$

16、额定频率f_N

设计电容器时所规定的频率.

17、运行温度 θ_{case}

在电容器达到热平衡状态时的外壳最热点温度。

18、最高运行温度 θ_{max}。

电容器可以运行的最高外壳温度。

19、最低运行温度 θ_{min}

电容器可以运行的最低电介质温度。

20、冷却空气温度 θ_{amb}

在稳定状态条件下，在电容器组最热区域的两单元之间中途所测得的空气温度。如果仅涉及一单元。则指在离电容器外壳10cm且距其基底2/3高度处所测得的空气温度。

Represents the sum of all inductive elements which are for mechanical and construction reasons contained in any capacitor.

15. Resonance Frequency f_r

Lowest Frequency at which the impedance of the capacitor becomes minimum. The value

is following: $fr=2\pi \times \sqrt{LsxCn}$

16. Rated frequency f_N

Specified frequency for which the capacitor has been designed

17.Operating temperature θ_{case}

Temperature of the hottest point on the case of the operating capacitor in thermal equilibrium.

18.Maximum operating temperatureθ_{max}

Highest temperature of the case at which the capacitor may be operated.

19.Lowest operating temperature θ_{min}

Lowest temperature of the dielectric at which the capacitor may be energized.

20.Cooling-air temperature θ_{amb}

Temperature of the air measured at the hottest position of the capacitor, under steady-state conditions , midway between two units.

If only one unit is involved, it is the temperature of surrounding air, measured 10cm away and at 2/3 of the case height of the capacitor under steady-state conditions.

常用术语 Common Terms

21、热阻Rth

热阻表征的是电容器的发热功率每上升1瓦，电容器内最热点的温度在环境温度的基础上升高的度数。

22、热点温度 θ_{hs}.

电容器内部最热点处的温度。

23、气侯类别

电容器所属的气侯类别用斜线分隔的三个数来表示(IEC 61071：

如：40/85/56).

40/85/56
- 稳态湿热实验的天数(56天)
- 上限类别温度(+85℃)
- 下限类别温度(-40℃)

24、绝缘电阻(IR)/时间常数(t)

绝缘电阻为电容器充电一分钟后所加的直流电压和流经电容器的漏电流值的比值，单位为MΩ。时间常数为绝缘电阻和电容量的乘积，通常以秒表示，公式如下：t[s]=IR [MΩ】x C[μF]

一般情况下，绝缘电阻用于描述小容量电容器的绝缘特性，时间常数用于描述大容量(如：C_N>0.33pF)电容器的绝缘特性。

21.Thermal resistance Rth

The thermal resistance indicates by how many degrees the capacitor temperature at the hotspot rises above θamb per watt of the heat dissipation losse.

22.Hotspot temperature θ_{hs}

Temperature at the hottest spot inside the capacitor.

23.Climatic category

The climatic category which the capacitor belongs to is expressed in three numbers separated by sloshes,(IEC 61071:example40/85/56).

40/85/56
- 稳态湿热实验的天数(56天)
- 上限类别温度(+85℃)
- 下限类别温度(-40℃)

24.Insulation Resistance(IR) / Time Constant (t)

The insulation resistance is the ratio between an applied D.C. voltage and the resulting leakage current after a minute of charge. It is expressed in MΩ. The time constant is expressed in seconds with the following formula: t[s]=IR [MΩ] x C[μF]

In general, Insulation resistance is used for describing smaller capacitance capacitors' insulation character, Time Constant for describing larger ones' (example: C_N >0.33pF).

Basic Knowledge 基础知识

常用术语 Common Terms

25、自愈性（仅对金属化膜电容器）

金属化膜的金属镀层是通过真空蒸发的方法将金属沉积在薄膜上，厚度只有几十个纳米，当介质上存在弱点、杂质时，局部电击穿就可能发生，电击穿处的电弧放电所产生的能量足以使电击穿点邻近处的金属镀层蒸发，使击穿点与周围极板隔开，电容器电气性能即可恢复正常。

25. Self-healing (Only for metallized film capacitor)

The metal coatings of the metallized film, which are vacuum deposited directly onto the plastic film, have a thickness of only several tens nm. At weak points or impurities in the dielectric, a dielectric breakdown would occur. The energy released by the arc discharge in the breakdown channel is sufficient to totally evaporate the thin metal coating in the vicinity of the channel. The insulated region thus resulting around the former faulty area will cause the capacitor to regain its full operation ability.

内部构造
Internal construction

1、电介质

该电容器是采用低损耗的金属化聚丙烯薄膜，该自愈式薄膜是采用进口基膜、应用专利技术蒸镀的渐变方阻安全膜。

薄膜采用全自动化设备卷绕成圆柱形，应用无感卷绕技术，芯子内部采用薄铜片连接技术，使得电容器制作电感更小，过电流过电压能力更强。

根据长期的使用与试验结果验证，我们的电容器电介质有非常好的自愈特性。

我们采用在薄膜边缘加厚的形式，增大边缘接触面积，从而使薄膜与喷金面的接触部分更好，加大产品的过电流能力，减少边缘应力。

1、Dielectric

The capacitors are used with low dissipation self-healing gradual square resistance anti-explosion metallized film(base film are imported), which are coated with patent technology .

The plastic film is wound into stable cylindrical windings on the most modern automated equipment. Non-sense winding technology, with thin pieces of copper's internal connection technology, makes the inductance smaller in capacitor production, more strong currents and overvoltage ability.

Long-term experience and research proves that the dielectric of the capacitors has an excellent self-healing characteristics.

By thickening the edge of the film, it will increase the edge contact area. The craft can make better contact part of film and metal spraying surface , increase product over current capacity, reduce edge stresses.

Basic Knowledge 基础知识

内部构造
Internal construction

2、浸渍剂

电容器中填充的介质是为了隔离电极间的空气，没有填充介质的保护，金属镀层将会被氧化，电容器的容量越来越小，损耗越来越大。

因此，在我们将电容器放入铝壳中用聚氨酯进行灌注时，需要对电容器进行真空干燥处理，从而保护卷绕的芯子与其周围的环境，使得电容器在长期使用时容量非常稳定。

电容器内部填充的是聚氨脂，因此该电容有很高的体积利用比，非常好的自愈特性，当运行过程中发生意外状况或者电容器超负荷时，电容器内部会自动断开确保运行安全。

2、Impregnants

The filled dielectric is to insulate the oxygen of the capacitor electrodes. Without such insulation, the metal coating would be corroded. The capacitance would become smaller and smaller with increasing loss.

Therefore, an elaborate vacuum-drying procedure is initiated immediately after insertion of the capacitor elements into the aluminums case with PUR. Both protect the winding from environmental influence and provide an extended life-expectancy and stable capacitance.

Filled with liquid resin, these capacitors have a high specific ratio of capacitance to volume. Very good self-healing characteristics, ensure safe operation and controlled disconnection in the event of overload or failure at the end of operating life.